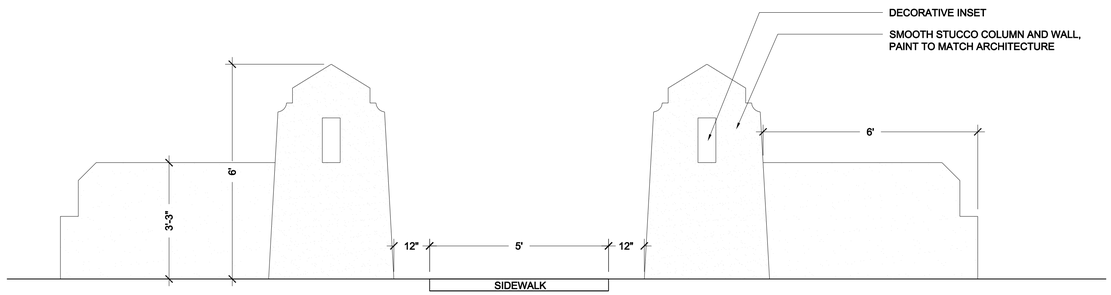


1 / LA3.04 PEDESTRIAN GATEWAY
SCALE: 1/2" = 1'-0"

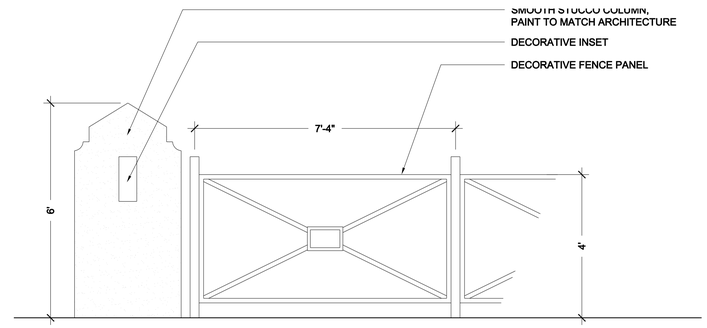


2 / LA3.04 ENTRY FENCE
SCALE: 1/2" = 1'-0"

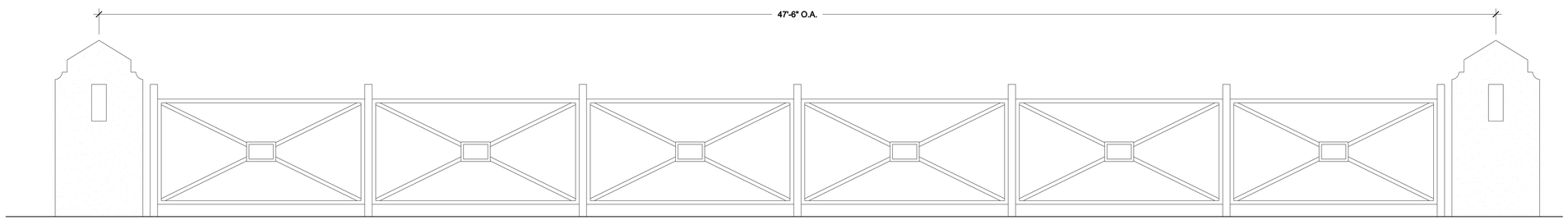


3 / LA3.04 ENTRY FENCE CHARACTER
SCALE: 1/2" = 1'-0"

PRODUCT NAME: PLANTER POT
MODEL #: 037 WAIMEA 72X21X42
COLOR: BRONZE
FINISH: N/A
MANUFACTURER: INTERNATIONAL ART PROPERTIES
CONTACT: 888-426-6471

037 WAIMEA - SIZES

| SIZE | TOP DIA. (in) | BASE DIA. (in) | HEIGHT (in) |
|---|---|---|---|
| 19x8x15.5 | 19 | 8 | 15.5 |
| 30x12.5x20 | 30 | 12.5 | 20 |
| 42x17x32 | 42 | 17 | 32 |
| 52x21x42 | 52 | 21 | 42 |
| 72x21x42 | 72 | 21 | 42 |

*Items actively stocked in Bronze, Copper, and Matte Black.*

4 / LA3.04 ENTRY PLANTER POT

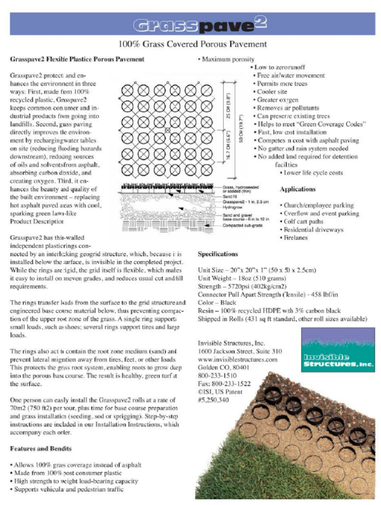

grasspave2

100% Grass Covered Porous Pavement

**Grasspave2 Flexible Plastice Porous Pavement**

Grasspave2 protect and enhances the environment in three ways. First, made fom 100% recycled plastic, Grasspave2 keeps common con umer and industrial products from going into landfills. Second, grass paving directly improves the environment by recharging water tables on site (reducing flooding hazards downstream), reducing sources of oils and solvents from asphalt, absorbing carbon dioxide, and creating oxygen. Third, it enhances the beauty and quality of the built environment – replacing hot asphalt paved areas with cool, sparkling green lawn-like

Product Description

Grasspave2 has this-walled independent plastic strips connected by an interlocking geogrid structure, which, because it is installed below the surface, is invisible in the completed project. While the rings are rigid, the grid itself is flexible, which makes it easy to install on uneven grades, and reduces usual cut and fill requirements.

The rings transfer loads from the surface to the grid structure and engineered base course material below, thus preventing compaction of the upper root zone of the grass. A single ring supports small loads, such as shoes; several rings support tires and large loads.

The rings also act to contain the root zone medium (sand) and prevent lateral migration away from tires, feet, or other loads. This protects the grass root system, enabling roots to grow deep into the porous base course. The result is healthy, green turf at the surface.

One person can easily install the Grasspave2 rolls at a rate of 70m2 (750 ft2) per tour, plus time for base course preparation and grass installation (seeding, sod or sprigging). Step-by-step instructions are included in our Installation Instructions, which accompany each order.

**Features and Benefits**

- Allows 100% grass coverage instead of asphalt
- Made from 100% post consumer plastic
- High strength to weight load-bearing capacity
- Supports vehicula and pedestrian traffic
- Maximum porosity
- Low to zero runoff
- Free air/water movement
- Permits more trees
- Cooler site
- Greater oxygen
- Removes air pollutants
- Can preserve existing trees
- Helps to meet "Green Coverage Codes"
- Fast, low cost installation
- Competes a cost with asphalt paving
- No gutter and rain system needed
- No added land required for detention facilities
  - lower life cycle costs

**Applications**

- Church/employee parking
- Overflow and event parking
- Golf cart paths
- Residential driveways
- Firelanes

**Specifications**

Unit Size – 20" x 20" x 1" (50 x 50 x 2.5cm)
Unit Weight – 18oz (510 grams)
Strength – 5720psi (402kg/cm2)
Connector Pull Apart Strength (Tensile) - 458 lbf/in
Color – Black
Resin – 100% recycled HDPE with 3% carbon black
Shipped in Rolls (431 sq ft standard, other roll sizes available)

Invisible Structures, Inc.
1600 Jackson Street, Suite 310
www.invisiblestructures.com
Golden CO, 80401
800-233-1510
Fax: 800-233-1522
©ISI, US Patent
#5,250,340



PRODUCT NAME: GRASS PAVE 2
MANUFACTURER: INVISIBLE STRUCTURES, INC.
CONTACT: 888-233-1510

5 / LA3.04 STABILIZED SOD

| | |
|---|---|
| Date: | 5/20/2016 |
| Drawn by: | PC |
| Reviewed by: | JW |
| Job Number: | 21606 |

| Revision: | Date: |
|---|---|
| | |

MAITLAND CONCOURSE NORTH
Maitland, Florida

Related Development, LLC.
Client Address

DIX.HITE + PARTNERS
150 W. JESSUP AVENUE
LONGWOOD, FLORIDA
TEL 407.862.1777
FAX 407.867.1779

CODE LANDSCAPE PLANS

Hardscape Details

Sheet Number:
LA3.04

PRODUCT NAME: LED ACCENT LIGHTING
MODEL #: 4620 LED WHT30K 120 MFL KM
COLOR: TBD
FINISH: N/A
MANUFACTURER: HYDREL
CONTACT: BOB WATSON, LANDRETH INC., 407-682-6255

1 / LA3.10 LANDSCAPE UPLIGHT

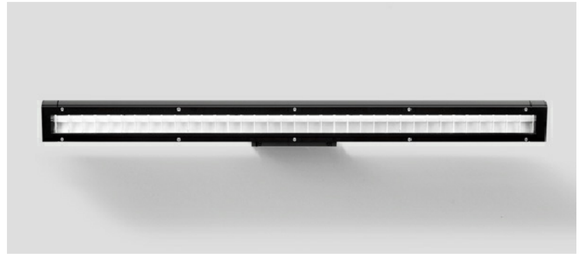

PRODUCT NAME: FLOODLIGHT
MODEL #: 77 363 40W LED (4000 K)
COLOR: TBD
FINISH: N/A
MANUFACTURER: BEGA-US
CONTACT: BOB WATSON, LANDRETH INC., 407-682-6255

2 / LA3.10 SIGN LIGHT

PRODUCT NAME: SITE LIGHT
MODEL #: DMS50-SG-LM 135W80LED4K-ES
COLOR: TBD
FINISH: N/A
MANUFACTURER: PHILIPS LUMEC
CONTACT: 450-430-7040

3 / LA3.10 SITE LIGHT

PRODUCT NAME: BOLLARD LIGHT
MODEL #: BLEDR 18N 4000K
COLOR: TBD
FINISH: N/A
MANUFACTURER: RAB LIGHTING INC.
CONTACT: 888-722-1000

3 / LA3.10 SITE LIGHT

| | |
|---|---|
| Date: | 5/20/2016 |
| Drawn by: | PC |
| Reviewed by: | JW |
| Job Number: | 21606 |

| Revision: | Date: |
|---|---|
| | |
| | |
| | |
| | |
| | |
| | |
| | |
| | |

MAITLAND CONCOURSE NORTH
Maitland, Florida

Related Development, LLC.
Client Address

DIX.HITE + PARTNERS
150 W. JESSUP AVENUE
LONGWOOD, FLORIDA
TEL 407.862.1777
FAX 407.867.1779

CODE LANDSCAPE PLANS

Lighting Details

Sheet Number:
LA3.10

| | |
|---|---|
| Date: | 5/12/2016 |
| Drawn by: | CB |
| Reviewed by: | JW |
| Job Number: | 21606 |
| Revision: | Date: |

MAITLAND CONCOURSE NORTH
Maitland, Florida

Related Development, LLC.
Client Address

DIX.HITE + PARTNERS
150 W. JESSUP AVENUE
LONGWOOD, FLORIDA
TEL 407.667.1777
FAX 407.667.1779

IRRIGATION PLANS

Key Sheet

Sheet Number:
LA6.00

05/31/2016 4:51pm H:\work\Clients\Related Development, LLC\Maitland Concourse North Common Areas\AutoCAD\Sheet Files\Irrigation\I-Mainline Plan.dwg LA6.00 jholden

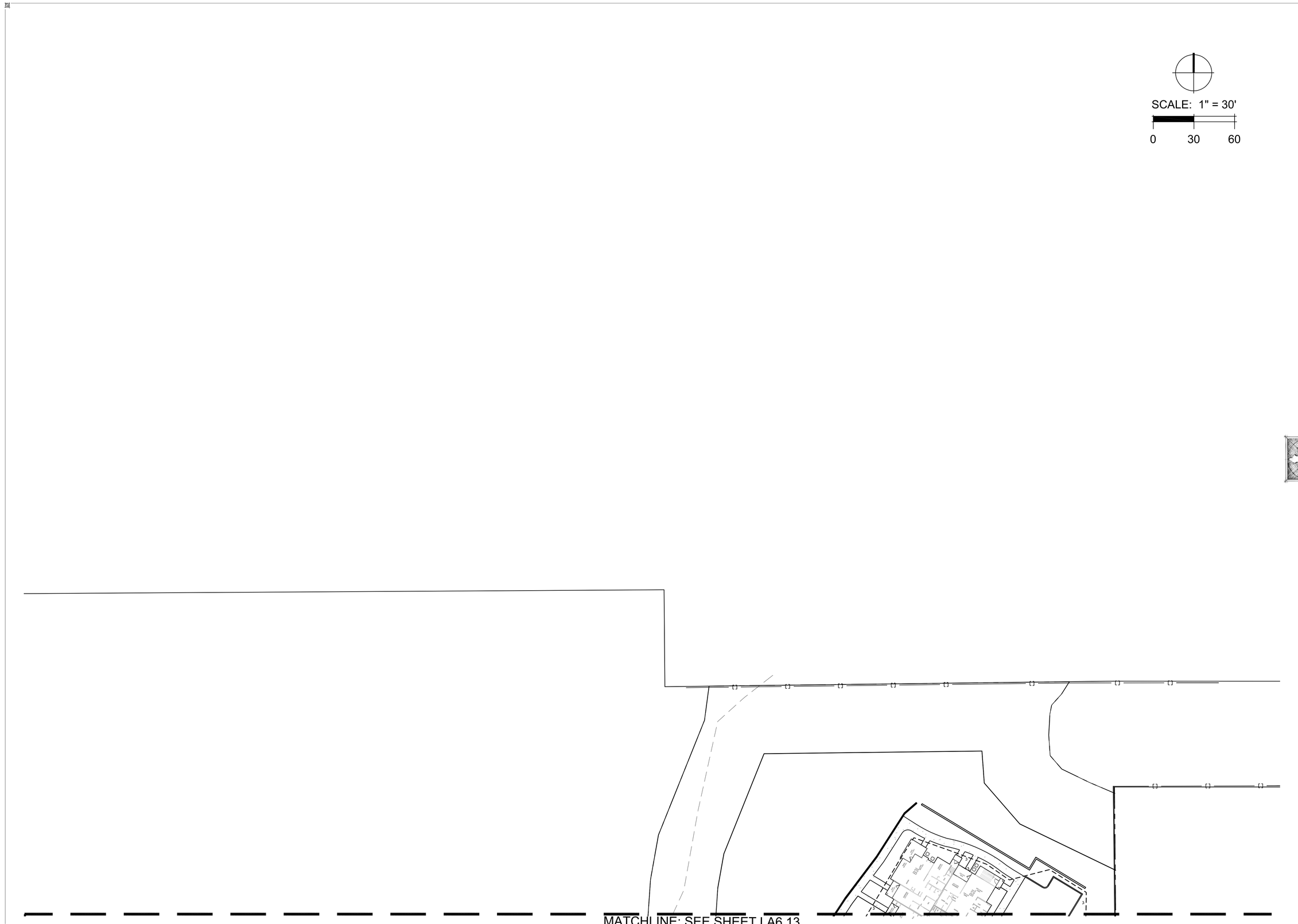


| | |
|---|---|
| Date: | 5/12/2016 |
| Drawn by: | CB |
| Reviewed by: | JW |
| Job Number: | 21606 |
| Revision: | Date: |

# MAITLAND CONCOURSE NORTH

Maitland, Florida

**Related Development, LLC.**

Client Address

DIX.HITE + PARTNERS
150 W. JESSUP AVENUE
LONGWOOD, FLORIDA
TEL 407.667.1777
FAX 407.667.1779

## IRRIGATION PLANS

Irrigation Distribution Plan

Sheet Number:

**LA6.10**

| | |
|---|---|
| Date: | 5/12/2016 |
| Drawn by: | CB |
| Reviewed by: | JW |
| Job Number: | 21606 |
| Revision: | Date: |

# MAITLAND CONCOURSE NORTH

Maitland, Florida

**Related Development, LLC.**

Client Address

DIX.HITE + PARTNERS
150 W. JESSUP AVENUE
LONGWOOD, FLORIDA
TEL 407.667.1777
FAX 407.667.1779

## IRRIGATION PLANS

Irrigation Distribution Plan

Sheet Number:

**LA6.11**

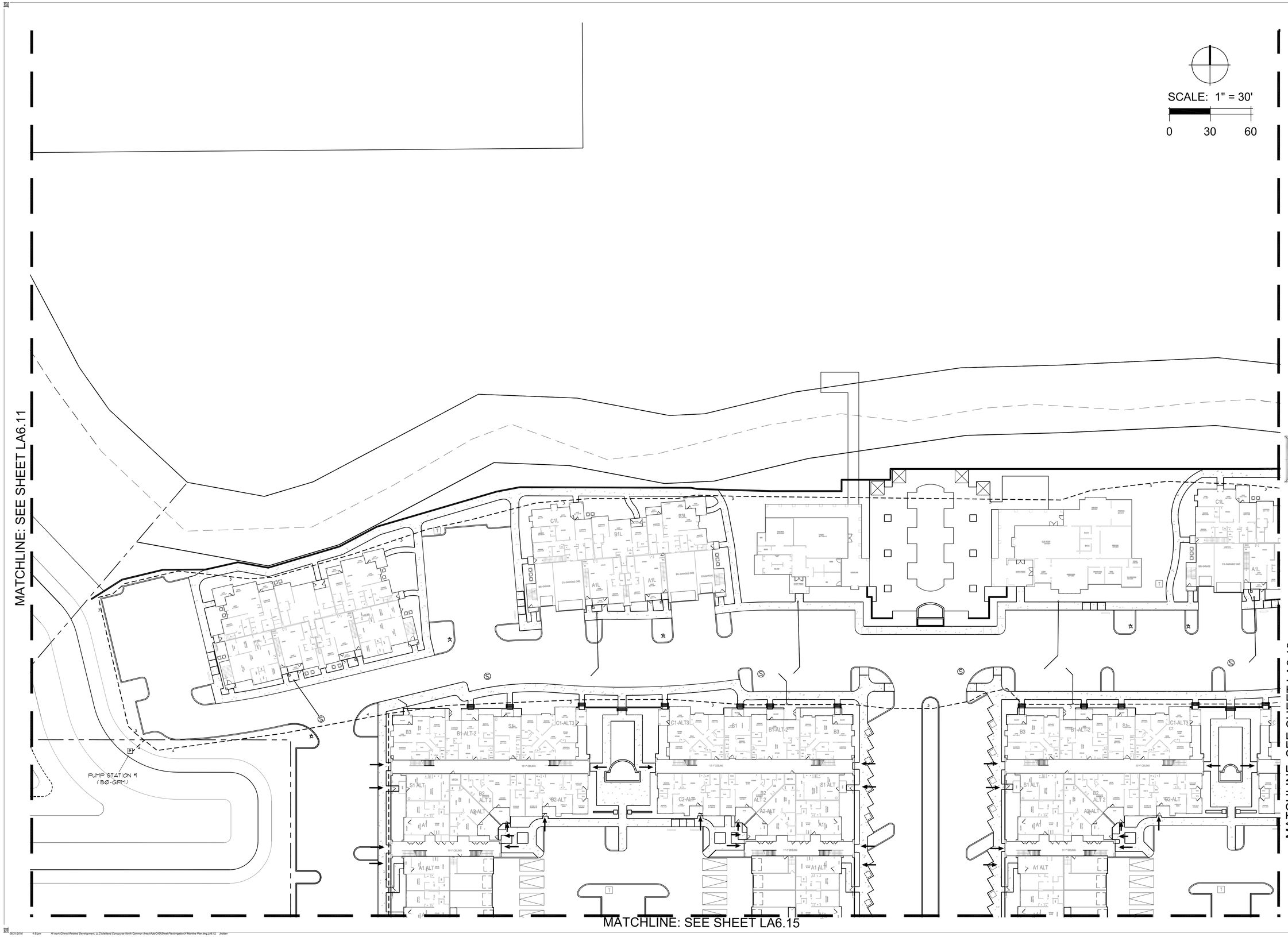


| | |
|---|---|
| Date: | 5/12/2016 |
| Drawn by: | CB |
| Reviewed by: | JW |
| Job Number: | 21606 |

| Revision: | Date: |
|---|---|
| | |

# MAITLAND CONCOURSE NORTH

Maitland, Florida

**Related Development, LLC.**

Client Address


DIX.HITE + PARTNERS
150 W. JESSUP AVENUE
LONGWOOD, FLORIDA
TEL 407.687.1779
FAX 407.687.1779


## IRRIGATION PLANS

Irrigation Distribution Plan

Sheet Number:

**LA6.12**

MATCHLINE: SEE SHEET LA6.10

MATCHLINE: SEE SHEET LA6.12

MATCHLINE: SEE SHEET LA6.16

| | |
|---|---|
| Date: | 5/12/2016 |
| Drawn by: | CB |
| Reviewed by: | JW |
| Job Number: | 21606 |
| Revision: | Date: |

# MAITLAND CONCOURSE NORTH

Maitland, Florida

Related Development, LLC.

Client Address


DIX.HITE + PARTNERS
150 W. JESSUP AVENUE
LONGWOOD, FLORIDA 32750
TEL 407.667.1777
FAX 407.667.1779


## IRRIGATION PLANS

Irrigation Distribution Plan

Sheet Number:

LA6.13

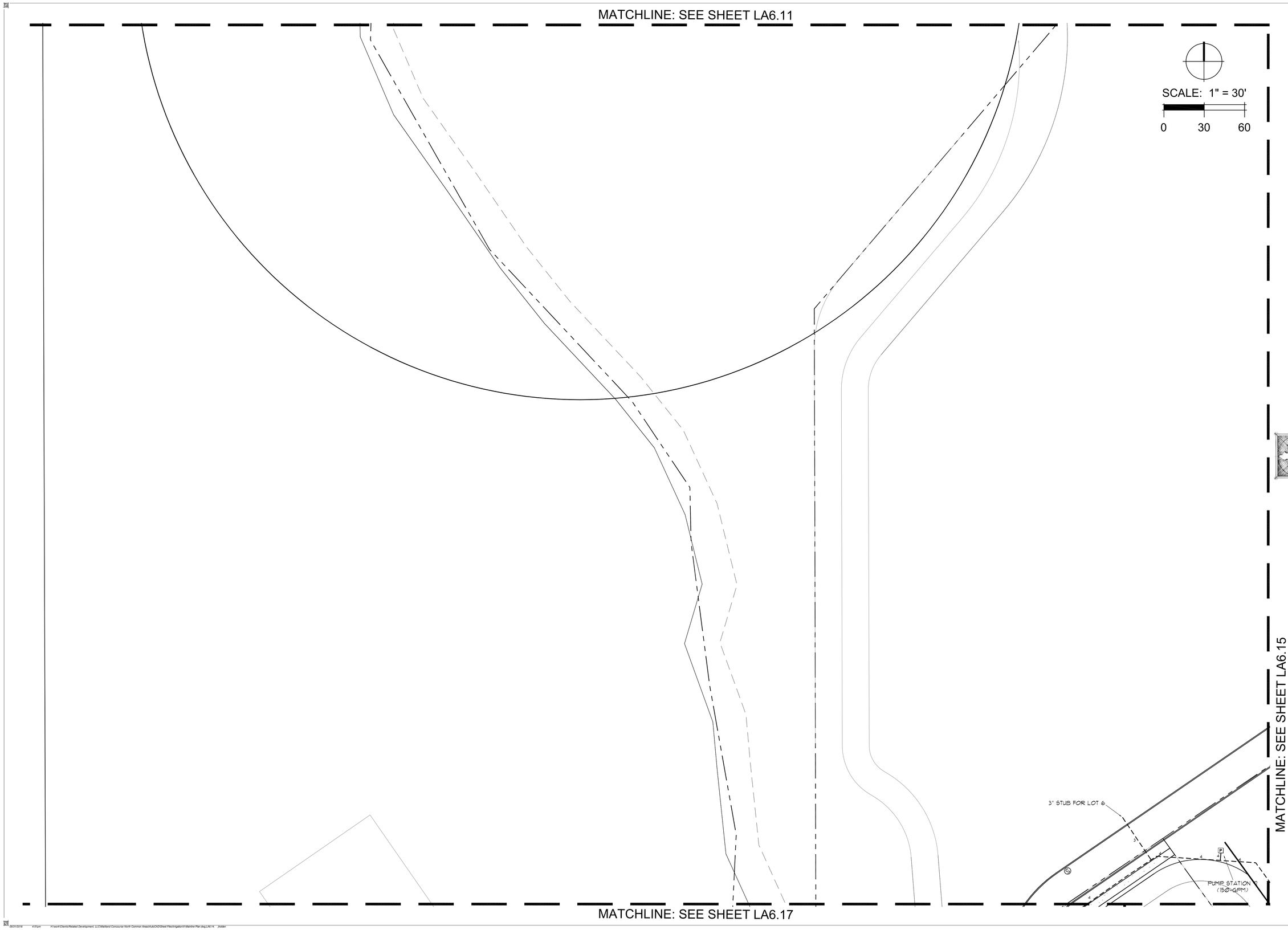


| | |
|---|---|
| Date: | 5/12/2016 |
| Drawn by: | CB |
| Reviewed by: | JW |
| Job Number: | 21606 |
| Revision: | Date: |

MAITLAND CONCOURSE NORTH

Maitland, Florida

Related Development, LLC.

Client Address

DIX.HITE + PARTNERS

150 W. JESSUP AVENUE
LONGWOOD, FLORIDA
TEL 407.667.1777
FAX 407.667.1779

IRRIGATION PLANS

Irrigation Distribution Plan

Sheet Number:

LA6.14

05/31/2016 4:51pm H:\work\Clients\Related Development, LLC\Maitland Concourse North Common Areas\AutoCAD\Sheet Files\Irrigation\X-Maintine Plan.dwg,LA6.14, jholden

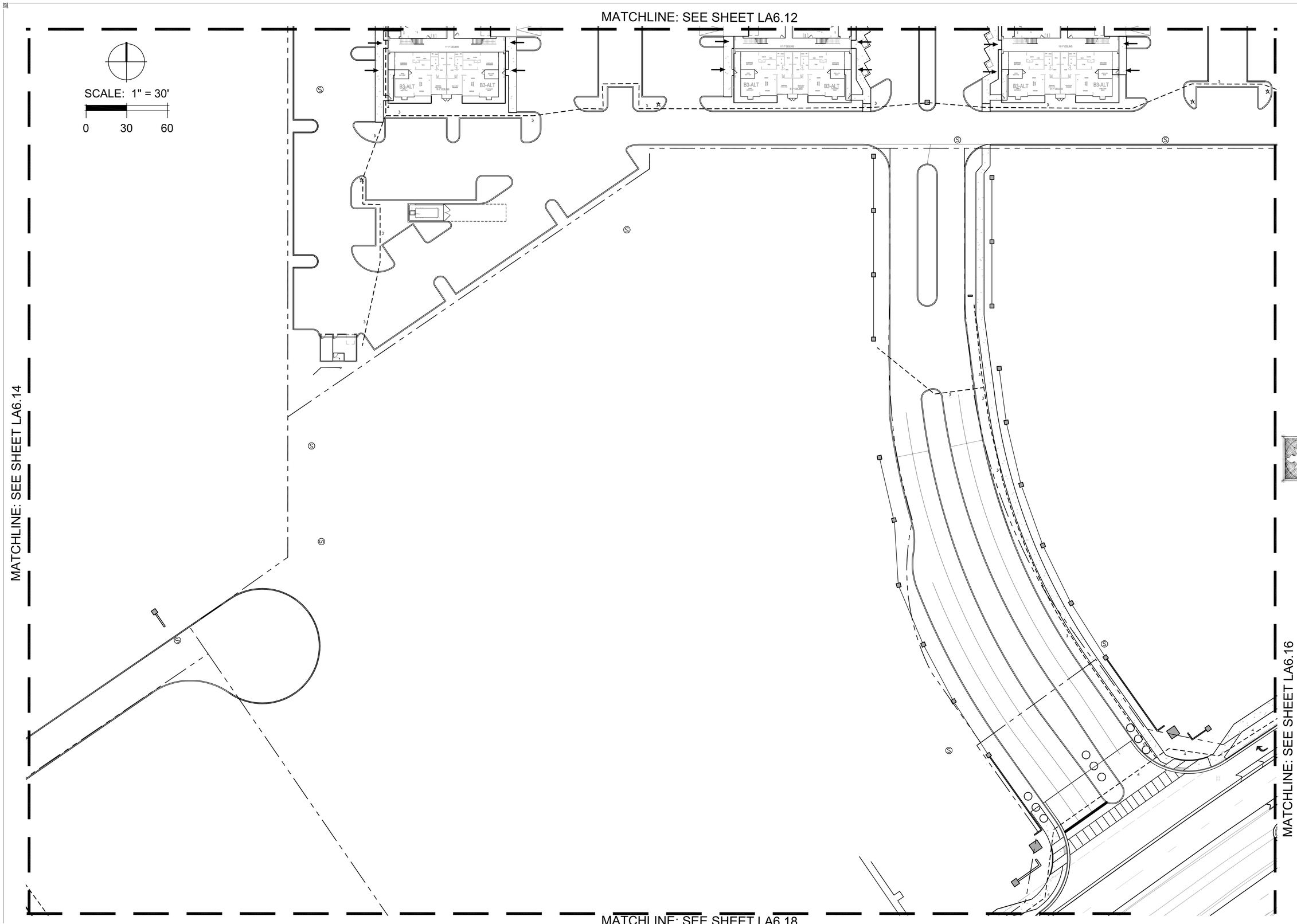


| | |
|---|---|
| Date: | 5/12/2016 |
| Drawn by: | CB |
| Reviewed by: | JW |
| Job Number: | 21606 |
| Revision: | Date: |

# MAITLAND CONCOURSE NORTH

Maitland, Florida

**Related Development, LLC.**

Client Address

DIX.HITE + PARTNERS
150 W. JESSUP AVENUE
LONGWOOD, FLORIDA
TEL 407.667.1777
FAX 407.667.1779

## IRRIGATION PLANS

Irrigation Distribution Plan

Sheet Number:

**LA6.15**

MATCHLINE: SEE SHEET LA6.13

MATCHLINE: SEE SHEET LA6.15

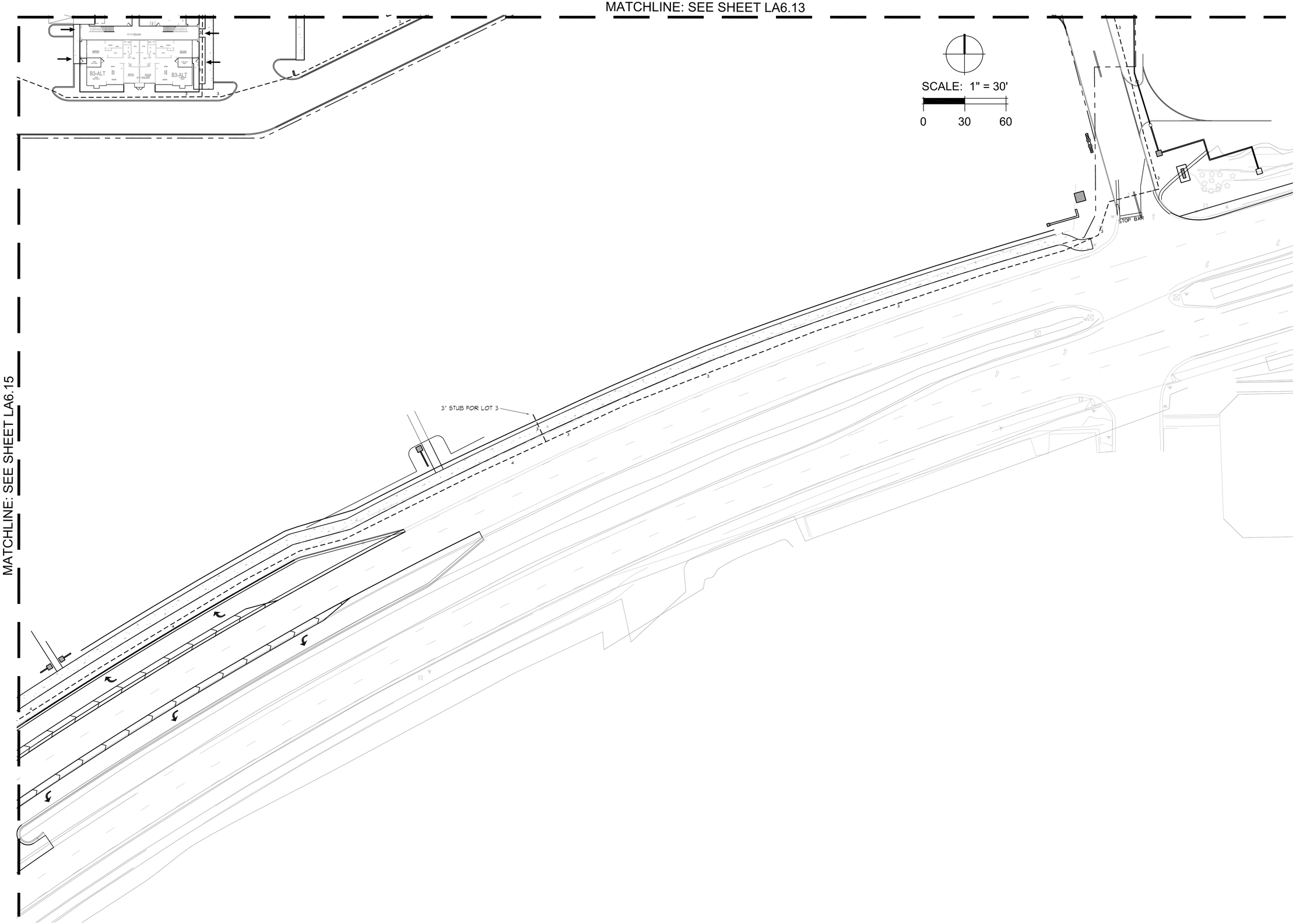


| | |
|---|---|
| Date: | 5/12/2016 |
| Drawn by: | CB |
| Reviewed by: | JW |
| Job Number: | 21606 |
| Revision: | Date: |

# MAITLAND CONCOURSE NORTH

Maitland, Florida

Related Development, LLC.

Client Address


DIX.HITE + PARTNERS
150 W. JESSUP AVENUE
LONGWOOD, FLORIDA
TEL 407.667.7777
FAX 407.667.1779


## IRRIGATION PLANS

Irrigation Distribution Plan

Sheet Number:

LA6.16

MATCHLINE: SEE SHEET LA6.14

SCALE: 1" = 30'

0 30 60

3' STUB FOR LOT 5

MATCHLINE: SEE SHEET LA6.18

MATCHLINE: SEE SHEET LA6.19

| | |
|---|---|
| Date: | 5/12/2016 |
| Drawn by: | CB |
| Reviewed by: | JW |
| Job Number: | 21606 |
| Revision: | Date: |

# MAITLAND CONCOURSE NORTH

Maitland, Florida

**Related Development, LLC.**

Client Address


DIX.HITE + PARTNERS

150 W. JESSUP AVENUE
LONGWOOD, FLORIDA
TEL 407.667.1777
FAX 407.667.1779


## IRRIGATION PLANS

Irrigation Distribution Plan

Sheet Number:

**LA6.17**

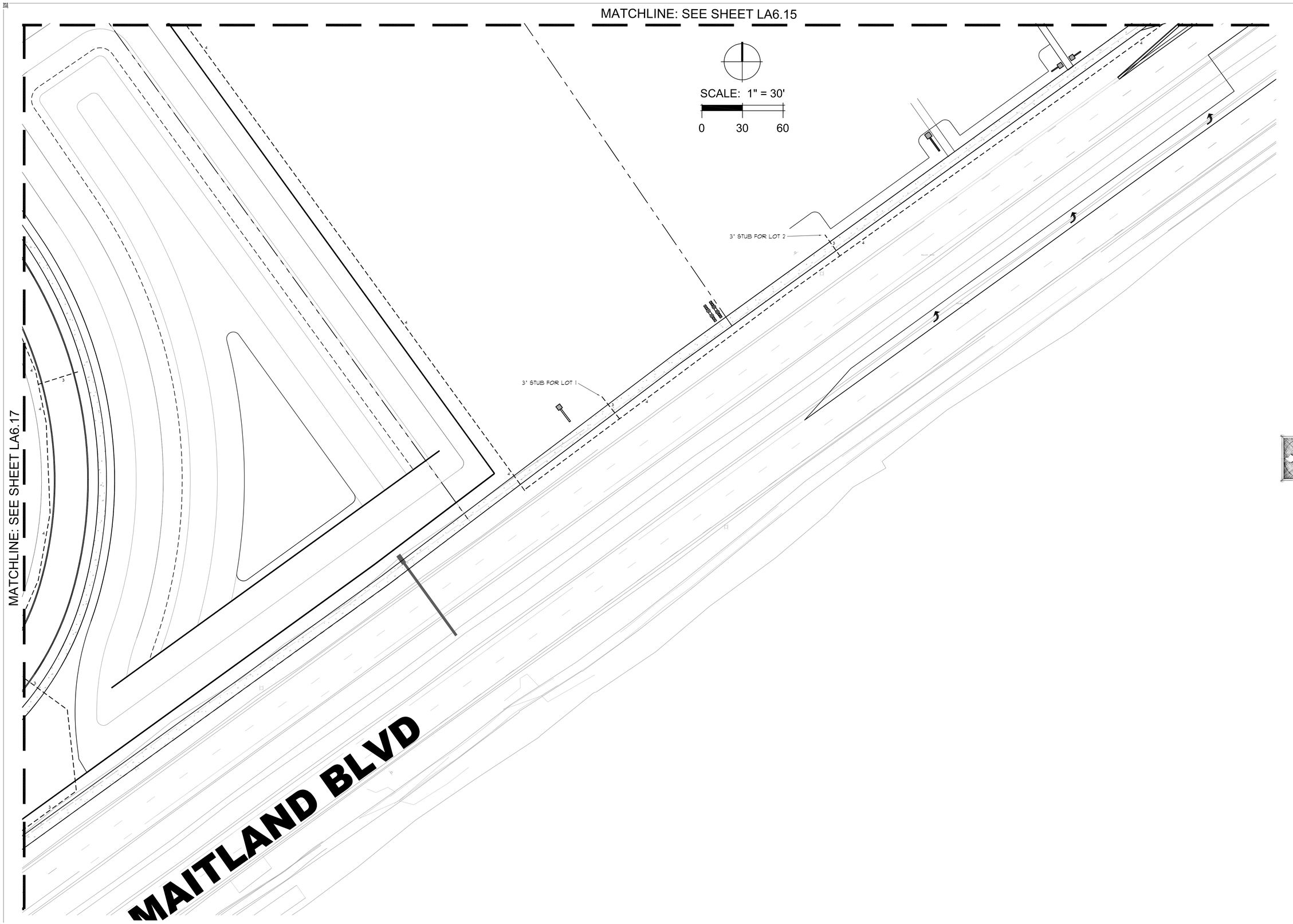


| | |
|---|---|
| Date: | 5/12/2016 |
| Drawn by: | CB |
| Reviewed by: | JW |
| Job Number: | 21606 |
| Revision: | Date: |

# MAITLAND CONCOURSE NORTH

Maitland, Florida

**Related Development, LLC.**

Client Address

DIX.HITE + PARTNERS
150 W. JESSUP AVENUE
LONGWOOD, FLORIDA
TEL 407.667.1777
FAX 407.667.1779

## IRRIGATION PLANS

Irrigation Distribution Plan

Sheet Number:

**LA6.18**

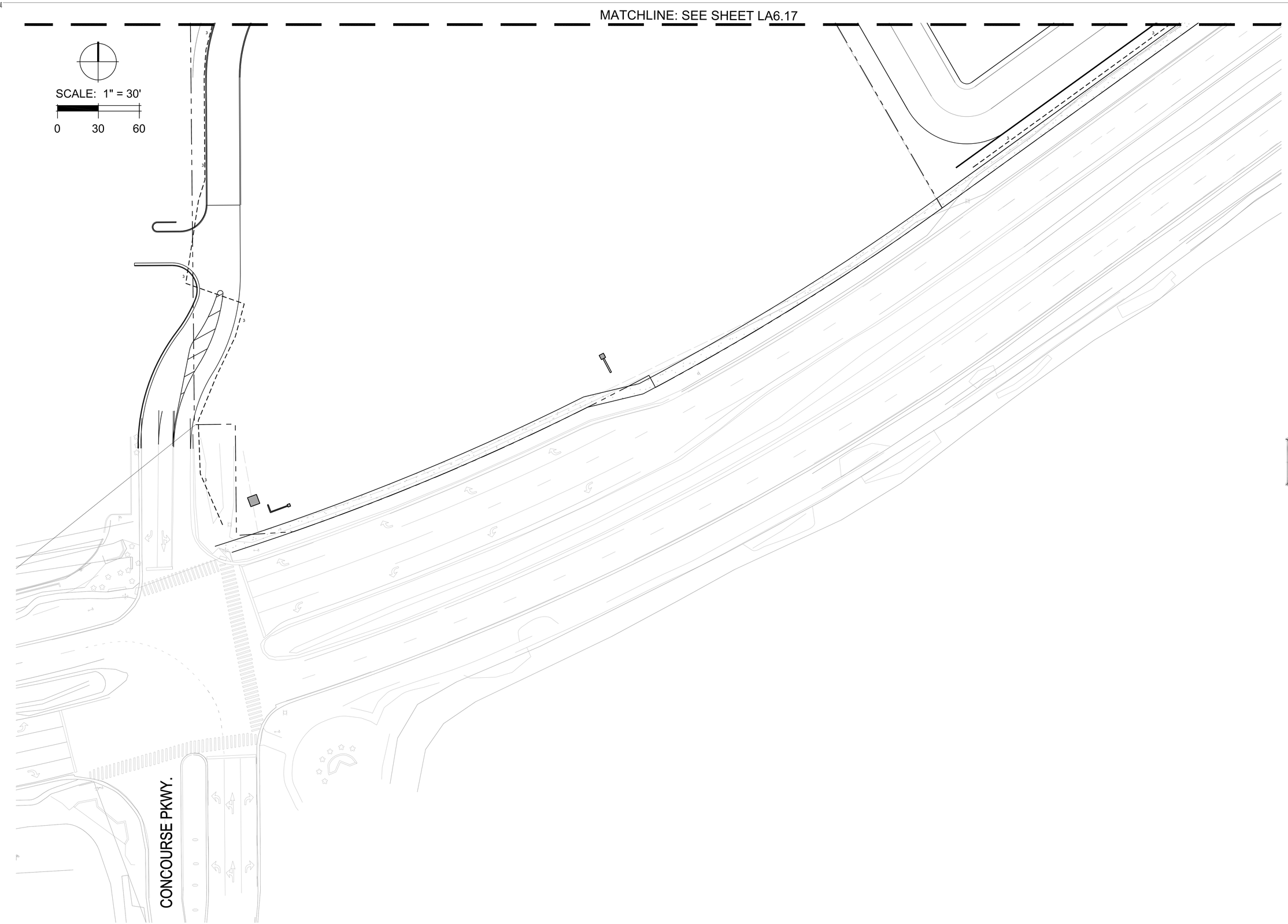


| | |
|---|---|
| Date: | 5/12/2016 |
| Drawn by: | CB |
| Reviewed by: | JW |
| Job Number: | 21606 |
| Revision: | Date: |

# MAITLAND CONCOURSE NORTH

Maitland, Florida

**Related Development, LLC.**

Client Address

DIX.HITE + PARTNERS
150 W. JESSUP AVENUE
LONGWOOD, FLORIDA
TEL 407.667.1777
FAX 407.667.1779

# IRRIGATION PLANS

Irrigation Distribution Plan

Sheet Number:

**LA6.19**

## SYMBOLS LEGEND

- HUNTER I20-04-PRB-6.0 POP-UP ROTOR HEAD
- HUNTER I20-04-PRB-3.0 POP-UP ROTOR HEAD
- HUNTER I20-04-PRB-3.5LA POP-UP ROTOR HEAD
- HUNTER I20-04-PRB-2.0LA POP-UP ROTOR HEAD
- HUNTER PROS-06-PRS30-CV 6'' POP-UP SPRAY HEAD
- HUNTER PROS-12-PRS30-CV 12'' HI-POP SPRAY HEAD
- HUNTER PROS-00-PRS30 SHRUB SPRAY HEAD
- HUNTER PCB-10 1.0-GPM BUBBLER HEAD
- HUNTER ICV-FS ELECTRIC VALVE, SIZE AS NOTED
- CLOW 1.B.B.M. PUSH-ON GATE VALVE, LINE SIZE, WITH 2'' NUT
- [A] HUNTER IC-4200-PL 42-STA. ELECTRIC CONTROLLER
- [B] HUNTER IC-4200-PL 42-STA. ELECTRIC CONTROLLER
- [P] WATERTRONICS WATERMAX 5000 V.F.D. PUMPIMG PACKAGE
- SCH.40 PVC PAVEMENT SLEEVE
- PR160 PVC S.W. MAINLINE PIPING
- PR160 PVC S.W. LATERAL PIPING

## VALVE INFORMATION

| VALVE NUM. | VALVE SI. | VALVE GPM | TYPE OF SPRINKLER | NOMINAL PRECIP RT. | CLOCK NUM. |
|---|---|---|---|---|---|
| 1 | 2'' | X | BUBBLER | N/A | A |
| 2 | 2'' | X | SHRUB SPRAY | 1.60 | A |
| 3 | 2'' | X | TURF ROTOR | 0.28 | A |
| 4 | 2'' | X | TURF SPRAY | 1.60 | A |
| 5 | 2'' | X | | | A |
| 6 | 2'' | X | | | A |
| 7 | 2'' | X | | | A |
| 8 | 2'' | X | | | A |
| 9 | 2'' | X | | | A |
| 10 | 2'' | X | | | A |
| 11 | 2'' | X | | | A |
| 12 | 2'' | X | | | A |
| 13 | 2'' | X | | | A |
| 14 | 2'' | X | | | A |
| 15 | 2'' | X | | | A |
| 16 | 2'' | X | | | A |
| 17 | 2'' | X | | | A |
| 18 | 2'' | X | | | A |
| 19 | 2'' | X | | | A |
| 20 | 2'' | X | | | A |
| 21 | 2'' | X | | | A |
| 22 | 2'' | X | | | A |
| 23 | 2'' | X | | | A |
| 24 | 2'' | X | | | A |
| 25 | 2'' | X | | | A |
| 26 | 2'' | X | | | A |
| 27 | 2'' | X | | | A |
| 28 | 2'' | X | | | A |
| 29 | 2'' | X | | | A |
| 30 | 2'' | X | | | A |
| 31 | 2'' | X | | | A |
| 32 | 2'' | X | | | A |
| 33 | 2'' | X | | | A |
| 34 | 2'' | X | | | A |
| 35 | 2'' | X | | | A |
| 36 | 2'' | X | | | A |
| 37 | 2'' | X | | | A |
| 38 | 2'' | X | | | A |
| 39 | 2'' | X | | | A |
| 40 | 2'' | X | | | A |

| VALVE NUM. | VALVE SI. | VALVE GPM | TYPE OF SPRINKLER | NOMINAL PRECIP RT. | CLOCK NUM. |
|---|---|---|---|---|---|
| 41 | 2'' | X | | | B |
| 42 | 2'' | X | | | B |
| 43 | 2'' | X | | | B |
| 44 | 2'' | X | | | B |
| 45 | 2'' | X | | | B |
| 46 | 2'' | X | | | B |
| 47 | 2'' | X | | | B |
| 48 | 2'' | X | | | B |
| 49 | 2'' | X | | | B |
| 50 | 2'' | X | | | B |
| 51 | 2'' | X | | | B |
| 52 | 2'' | X | | | B |
| 53 | 2'' | X | | | B |
| 54 | 2'' | X | | | B |
| 55 | 2'' | X | | | B |
| 56 | 2'' | X | | | B |
| 57 | 2'' | X | | | B |
| 58 | 2'' | X | | | B |
| 59 | 2'' | X | | | B |
| 60 | 2'' | X | | | B |
| 61 | 2'' | X | | | B |
| 62 | 2'' | X | | | B |
| 63 | 2'' | X | | | B |
| 64 | 2'' | X | | | B |
| 65 | 2'' | X | | | B |
| 66 | 2'' | X | | | B |
| 67 | 2'' | X | | | B |
| 68 | 2'' | X | | | B |
| 69 | 2'' | X | | | B |
| 70 | 2'' | X | | | B |
| 71 | 2'' | X | | | B |
| 72 | 2'' | X | | | B |
| 73 | 2'' | X | | | B |
| 74 | 2'' | X | | | B |
| 75 | 2'' | X | | | B |
| 76 | 2'' | X | | | B |
| 77 | 2'' | X | | | B |
| 78 | 2'' | X | | | B |
| 79 | 2'' | X | | | B |
| 80 | 2'' | X | | | B |

## IRRIGATION PUMP STATION NOTES

1) COORDINATE THE LOCATION FOR THE PUMP STATIONS ON SITE WITH ENGINEER AND LANDSCAPE ARCHITECT, SO THAT ACCESS MAY PROVIDED FOR SERVICE, WHILE LEAVING THE EQUIPMENT AESTHETICALLY UNOBTRUSIVE. VERTICAL DISTANCE FROM NORMAL WATER LEVEL TO PUMP INLET SHALL NOT EXCEED 10 FEET, AND SHOULD BE LESS, IF POSSIBLE.

2) PUMP STATIONS SHALL BE ORDERED WITH POWER CHARACTERISTICS IN KEEPING WITH THE POWER AVAILABLE ON THE SITE.

3) PUMP STATIONS SHALL BE END-SUCTION CENTRIFUGAL TYPE, PREFABRICATED AND DELIVERED IN SKID-MOUNTED, VENTILATED AND WEATHER RESISTANT ENCLOSURES.

4) PUMP STATIONS SHALL UTILIZE V.F.D. DRIVES, AND SHALL BE CAPABLE OF PROVIDING VARIABLE WATER VOLUMES FROM 30 TO 150-GPM AT PRESSURES AS DESCRIBED IN THE DRAWINGS.

5) PUMP STATIONS SHALL INCORPORATE ALL RECOMMENDED SHUTOFFS AND SAFETY FEATURES, INCLUDING, BUT NOT LIMITED TO, LOSS-OF-PRIME, OVER/UNDER VOLTAGE, PHASE FAILURE AND HIGH/LOW PRESSURE.

6) PUMP STATIONS SHALL INCLUDE SUITABLE PRESSURE VESSELS OR TANKS, AND SHALL OPERATE ON DEMAND PRESSURE, WITH PRESSURE OR LOW-FLOW SHUTOFFS.

7) PUMP STATIONS SHALL BE EQUIPPED WITH 80-MESH WYE STRAINERS, EITHER OUTBOARD OR INBOARD TO THE ENCLOSURES. WYE STRAINERS SHALL BE SET UP FOR PERIODIC AUTOMATIC BACKFLUSH. BACKFLUSH SHALL BE PIPED TO OUTLETS IN IRRIGATION LAKES.

8) PUMP STATIONS SHALL INCLUDE ¾" RETURNS FOR PURPOSES OF FLUSHING THE INTAKE SCREENS WHILE PUMPS ARE IN OPERATION.

9) PUMP SUCTIONS SHALL BE CONSTRUCTED USING PREFABRICATED 6" Z-PIPES, AND 6" WELDED H.D.P.E. SUCTION PIPES, INSTALLED WITHOUT HUMPS, AND SLOPING DOWNWARD CONSISTENTLY TOWARD THE INLET SCREENS. SUCTION PIPES SHALL BE SECURED PROPERLY FLOAT RIGS, AND INTAKE SCREEN SHALL BE SECURELY AFFIXED. A MINIMUM OF 3' OF COVER SHALL BE AFFORDED THE INTAKE SCREEN BELOW N.W.L. AND A MINIMUM OF 2 FEET CLEARANCE OFF THE BOTTOM SHALL BE OBSERVED.

10) THE INLET SCREENS SHALL BE SIZED IN ACCORDANCE WITH THE MAXIMUM CAPACITY OF THE PUMP STATION. THE SCREENS SHALL BE ROTATING, SELF-CLEANING TYPES (EXAMPLE: PLUM CREEK).

11) THE SUCTION INTAKES SHALL INCLUDE PROPERLY-SIZED NON-SLAM CHECK VALVES, EITHER FLANGED OR WAFER TYPE. THE CHECK VALVES MAY ALSO BE INCORPORATED INTO THE INTAKE STRUCTURES, AT THE DISCRETION OF THE MANUFACTURER.

12) PROVIDE ¾" SCH.40 PVC RETURN LINES FROM THE PUMP STATIONS TO THE CLEANING INLET PORTS ON THE INTAKE SCREENS

13) PUMPING STATIONS SHALL BE MANUFACTURED BY AN APPROVED COMPANY (EXAMPLE: WATERTRONICS, PSI/FLOWTRONEX, HOOVER) WHOSE PRIMARY BUSINESS IS THE MANUFACTURE OF PUMPING STATIONS. INSTALLER-BUILT OR FIELD-FABRICATED SYSTEMS SHALL NOT BE USED.

14) NO PROVISIONS HAVE BEEN MADE HEREIN FOR SUPPLEMENTAL RECHARGE TO IRRIGATION PONDS. THIS MATTER TO BE COORDINATED WITH THE CIVIL ENGINEER AT A FUTURE DATE.

15) IF REQUIRED BY CODES OR W.M.D. MANDATE, PUMP STATIONS SHALL BE EQUIPPED WITH APPROVED TOTALIZING TURBINE OR SOLID-STATE WATER METERS, INCLUDING REQUIRES STRAIGHT PIPE METERING RUNS.

## WARRANTY/DISCLAIMER

THE INSTALLER SHALL BE REQUIRED TO SUBMIT A WRITTEN WARRANTY STATEMENT PRIOR TO FINAL ACCEPTANCE OF THE WORK. ALL MATERIAL AND LABOR SHALL BE GUARANTEED FOR A PERIOD NOT LESS THAN ONE YEAR FROM DATE OF ACCEPTANCE BY THE OWNER. ANY MANUFACTURERS' WARRANTIES OF GREATER THAN ONE YEAR SHALL BE SUPPORTED BY THE INSTALLER. THE INSTALLER SHALL BE EXPECTED TO IDENTIFY AND ADHERE TO ANY PREVAILING CODES OR ORDINANCES WHICH MAY DIFFER FROM THE CONTENT OF THESE DOCUMENTS. THE INSTALLER SHALL BE FURTHER EXPECTED TO OBSERVE ANY REQUIREMENTS MADE BY THE EQUIPMENT/MATERIAL MANUFACTURERS ON WHICH WARRANTY COVERAGE IS PREDICATED. FAILURE BY THE INSTALLER TO FURNISH A WRITTEN WARRANTY STATEMENT SHALL NOT AFFECT HIS OBLIGATION TO ADHERE TO THE STIPULATIONS SET FORTH HEREIN. THE OWNER SHALL RETAIN THE RIGHT TO REMEDY ANY DEFICIENCIES WHICH MAY ARISE, IF THE INSTALLER FAILS TO RESPOND IN A TIMELY FASHION TO CLAIMS MADE UNDER THE WARRANTY. THE OWNER FURTHER RESERVES THE RIGHT TO SEEK REIMBURSEMENT FROM THE INSTALLER FOR ANY COSTS OR DAMAGES INCURRED AS A RESULT OF SUCH FAILURE TO RESPOND.

## GENERAL NOTES

1. THE DRAWINGS ARE TO BE CONSIDERED DIAGRAMMATIC, AS IT MAY NOT HAVE BEEN POSSIBLE TO ACCURATELY DEPICT THE EXACT LOCATIONS FOR ALL MATERIAL, OR ALL JOBSITE ELEMENTS. THE INSTALLER SHALL BE EXPECTED TO MAKE MINOR ADJUSTMENTS ON THE SITE AS NEEDED, IN ORDER TO MAINTAIN COMPLETE AND ACCURATE COVERAGE, AND MAINTAIN THE INTENT OF THE DESIGN. MODIFICATIONS WHICH INCREASE THE SPACING OF HEADS, OR DECREASE THE SIZING OF PIPE, SHALL NOT BE MADE WITHOUT PRIOR CONSENT OF THE PROJECT MANAGER. THE FINAL LOCATIONS FOR ALL MAJOR EQUIPMENT, INCLUDING CONTROLLERS, VALVES, SUPPLY CONNECTIONS, MAINLINES, ETC. SHALL BE DETERMINED IN THE FIELD, STAKED OUT BY THE CONTRACTOR, USING THE DRAWINGS AS A GUIDE, AND APPROVED PRIOR TO INSTALLATION.

2. ALL WORK SHALL BE DONE IN ACCORDANCE WITH PREVAILING CODES AND REGULATIONS. ALTHOUGH DUE DILIGENCE HAS BEEN EXERCISED IN THE PREPARATION OF THE DOCUMENTS TO AVOID CONFLICTS, IT SHALL REMAIN THE RESPONSIBILITY OF THE INSTALLER FOR VERIFICATION AND CONFORMANCE TO THE PARTICULAR CODES FOR THIS LOCATION. THE INSTALLER SHALL OBTAIN ANY NECESSARY PERMITS, LOCATES, AND INSPECTIONS.

3. ALL WORK SHALL BE CLOSELY COORDINATED WITH THAT OF OTHER TRADES, IN ORDER TO AVOID CONFLICTS. THE INSTALLATION SHALL BE COORDINATED WITH ALL NEW AND EXISTING IMPROVEMENTS, AND WITH THE ACTUAL INSTALLED BEDLINES, SOD LIMITS, AND PLANT LOCATIONS.

4. THE INSTALLER SHALL BE FAMILIAR WITH ALL APPLICABLE DOCUMENTS, INCLUDING ANY WRITTEN SPECIFICATIONS THAT MAY HAVE BEEN ISSUED. ANY CONFLICT FOUND BETWEEN THE VARIOUS DOCUMENTS SHALL BE SUBMITTED IN WRITING TO THE PROJECT MANAGER FOR DETERMINATION.

5. ALL MATERIAL AND LABOR NECESSARY TO PROVIDE A COMPLETE, FULLY OPERATIONAL, AND GUARANTEED SYSTEM SHALL BE CONSIDERED PART OF THE WORK, WHETHER OR NOT THEY ARE SPECIFICALLY INDICATED IN THE DOCUMENTS. THIS SHALL INCLUDE CONFORMANCE TO THE REQUIREMENTS AND RECOMMENDATIONS OF THE VARIOUS MANUFACTURERS OF THE EQUIPMENT, AND TO APPLICABLE TRAINING AND CERTIFICATION OF INSTALLATION PERSONNEL.

6. UNLESS SPECIFICALLY STATED TO THE CONTRARY, PIPING AND WIRING PASSING UNDER PAVED OR OTHER IMPERVIOUS SURFACES SHALL BE INSTALLED IN SLEEVING OF ADEQUATE SIZE AND STRENGTH. SIDEWALKS AND DECKS AND TURF PAVERS SHALL REQUIRE SLEEVING, EVEN IF NOT SHOWN ON THE DRAWINGS. CONTROL WIRING MAY BE RUN WITHIN A LARGER SLEEVE WITH MAINLINE PIPING, BUT ONLY IF PROTECTED BY A SMALLER CONDUIT. WIRE MAY NOT BE TAPED TO THE MAINLINE IN LIEU OF THIS CONDUIT, AS ABRASION OF THE WIRE JACKET IS LIKELY TO OCCUR.

7. SLEEVES UNDER PARKING AND DRIVEWAYS MAY BE THE RESPONSIBILITY OF OTHER THAN THE IRRIGATION CONTRACTOR (SUCH AS THE PAVING OR SITE CIVIL CONTRACTOR). CONSULT OTHER DOCUMENTS FOR ADDITIONAL INFORMATION. ANY NEEDED SLEEVE WHICH EITHER CANNOT BE FOUND OR IS DAMAGED BEYOND PRACTICAL USE SHALL BE REPORTED TO THE PROJECT MANAGER IMMEDIATELY, ALONG WITH RECOMMENDATIONS FOR CORRECTIVE ACTION. SLEEVES UNDER SIDEWALKS, DECKS, ETC. ARE NORMALLY INSTALLED BY THE IRRIGATION CONTRACTOR.

8. CONTROL WIRING SHALL BE ROUTED WITH THE MAINLINE WHENEVER POSSIBLE. OTHERWISE, WIRING SHALL BE PROTECTED WITH PVC CONDUIT OF SUITABLE SIZE, AND PULL BOXES AT RECOMMENDED INTERVALS. LOW VOLTAGE WIRING SHALL BE TYPE "UF", WITH PVC JACKET. MULTI-CONDUCTOR OR NON-PVC JACKETS SHALL NOT BE PERMITTED WITHOUT PRIOR APPROVAL OF THE PROJECT MANAGER. UNLESS STATED TO THE CONTRARY, ZONE "HOT" WIRES SHALL BE SIZE 14-1, COLORED RED. SPARE WIRES, A MINIMUM OF TWO OF WHICH SHALL BE RUN FROM EACH CONTROLLER TO THE FARTHEST ZONE VALVE IN EACH DIRECTION, SHALL BE 14-1, BLUE IN COLOR. VALVE COMMON WIRES SHALL BE 12-1, WHITE IN COLOR. WIRE SPLICES FOR ELECTRIC VALVES SHALL BE OF APPROVED TYPE. SPEARS "DRI-SPLICE" CONNECTORS AND SEALANT ARE THE PREFERRED CONNECTORS, BUT "KING NUTS" OR OTHER TYPES MAY BE SUBMITTED AS AN ALTERNATE. THE INSTALLER SHALL INSTALL ALL WIRING WITH ADEQUATE SLACK, SNAKED IN TRENCHES, BUNDLED AT TEN FOOT INTERVALS, AND WITH SURGE/EXPANSION COILS AT THE VALVES AND THE CONTROLLER LOCATION.

9. ALL SPRINKLER HEADS SHALL BE OF THE PROPER SIZE AND TYPE FOR THE LOCATION AND PLANT MATERIAL. HEADS SHALL BE INSTALLED IN THE PRESCRIBED MANNER, PLUMB, AND WITH THE PROPER HEIGHT WITH RESPECT TO GRADE AND/OR PLANT MATERIAL. ALL HEADS AND OTHER EQUIPMENT SHALL BE INSTALLED WITH ADEQUATE AND UNIFORM CLEARANCES FROM ALL PAVING, CURBS, SIDEWALKS, WALLS, AND OTHER OBSTACLES, SO THAT DAMAGE TO EQUIPMENT DOES NOT OCCUR DURING NORMAL LANDSCAPE MAINTENANCE OPERATIONS. ALL SPRINKLERS SHALL BE ADJUSTED TO OBTAIN OPTIMAL COVERAGE OF PLANT MATERIAL, WHILE MINIMIZING OVERSPRAY ONTO WINDOWS, WALLS PAVING OR OTHER IMPERVIOUS SURFACES, PARTICULARLY WOODWORK AND/OR TRIM. THE INSTALLER SHALL UTILIZE THE PROPER SPRAY NOZZLE PATTERN FOR THE LOCATION, AS WELL AS PRESSURE-COMPENSATING HEADS OR SCREENS, AND ADJUSTABLE-PATTERN NOZZLES WHERE A FIXED PATTERN IS NOT SUITABLE TO CONTROL COVERAGE OR OVERSPRAY.

10. RISER-MOUNTED HEADS SHALL BE INSTALLED WITHIN THE FIRST ROW OF PLANT MATERIAL, SO THAT THE HEAD IS PROTECTED AND CONCEALED BY THE MATERIAL. IT MAY BE REQUIRED TO RELOCATE HEADS NOT CONFORMING TO THIS STIPULATION AFTER PLANTS ARE INSTALLED. THIS SHALL BE DONE AT NO ADDITIONAL COST TO THE OWNER. RISERS SHALL BE STAKED AS SHOWN IN THE DETAILS, AND PAINTED A DURABLE FLAT COLOR, TO BE AGREED UPON BY THE PARTIES.

11. THERE ARE MULTIPLE CONTROLLERS IN USE ON THIS PROJECT. HOWEVER, THERE SHOULD BE NO NEED FOR WIRING FROM ANY TWO CONTROLLERS TO SHARE THE SAME TRENCH. IN THE EVENT THAT THIS DOES HAPPEN, THERE SHALL BE NO CROSS-WIRING BETWEEN DIFFERENT CONTROLLERS. IF VALVE WIRING FROM DIFFERENT CONTROLLERS SHARES A COMMON DITCH, WIRES SHALL BE BUNDLED SEPARATELY BY CONTROLLER, AND BUNDLES ISOLATED IN THE DITCH. VALVE COMMON WIRES FROM DIFFERENT CONTROLLERS SHALL HAVE UNIQUE COLOR TRACERS CAST INTO THE INSULATION.

12. THE CONTROLLERS SHALL REQUIRE STANDARD 120-VAC POWER FEEDS, WHICH SHALL BE COORDINATED BY THE INSTALLER, AND HOOKED UP BY A LICENSED ELECTRICIAN. IT IS PREFERRED THAT DEDICATED CIRCUITS BE PROVIDED FOR THESE CONNECTIONS. A 3-WIRE POWER INPUT SURGE ARRESTOR SHALL BE PROVIDED ON EACH POWER FEED, AND DEDICATED GROUND ROD/PLATE NETWORKS (SEE DETAIL) SHALL BE INSTALLED, HAVING A MEASURED EARTH GROUND RESISTANCE OF NOT GREATER THAN TEN (10) OHMS.

13. EACH CONTROLLER SHALL BE EQUIPPED WITH A PROPERLY LOCATED AND INSTALLED RAIN SHUTOFF SENSOR DEVICE (RAIN-CLIK REMOTE, UNLESS NOTED OTHERWISE) AS REQUIRED BY FLORIDA LAW. THE SENSORS SHALL BE LOCATED IN SUCH A MANNER SO THAT THEY ARE UNOBSTRUCTED AND DIRECTLY EXPOSED TO NATURAL RAINFALL AND SUNLIGHT FROM ALL DIRECTIONS, BUT NOT TO RUNOFF WATER FROM ROOFS, ETC.

14. THE MINIMUM SUPPLY REQUIREMENT FOR THE SYSTEM AS DESIGNED IS 2 x 150-GPM AT 65-PSI.

15. THE INSTALLER SHALL BE EXPECTED TO BE FAMILIAR WITH ALL REQUIREMENTS FOR THE WORK, AND TO CONDUCT HIS WORK IN A CLEAN, SAFE, AND WORKMANLIKE MANNER. THE OWNER RESERVES THE RIGHT TO ACT TO PROTECT HIS PROPERTY AND THE OTHER PERSONNEL AT WORK THERE, AND TO MAKE EMERGENCY REPAIRS OR TAKE CORRECTIVE ACTION IF THE INSTALLER DOES NOT FULFILL HIS OBLIGATIONS IN A TIMELY MANNER. THE OWNER FURTHER RESERVES THE RIGHT TO BACK-CHARGE THE INSTALLER TO COVER SUCH EXPENSES, TO THE EXTENT ALLOWED UNDER APPLICABLE LAW.

| | |
|---|---|
| Date: | 5/12/2016 |
| Drawn by: | CB |
| Reviewed by: | JW |
| Job Number: | 21606 |
| Revision: | Date: |

MAITLAND CONCOURSE NORTH
Maitland, Florida

Related Development, LLC.
Client Address

DIX.HITE + PARTNERS
150 W. JESSUP AVENUE
LONGWOOD, FLORIDA 32750
TEL 407.667.1777
FAX 407.667.1779

IRRIGATION PLANS

Irrigation Symbols, Tables & Notes

Sheet Number:
LA6.90

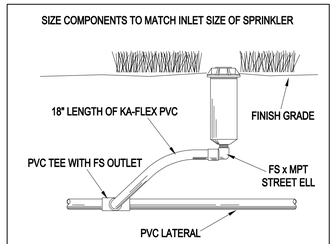


## POP-UP ROTOR HEAD

(ALSO USED FOR MINI-ROTOR HEADS)

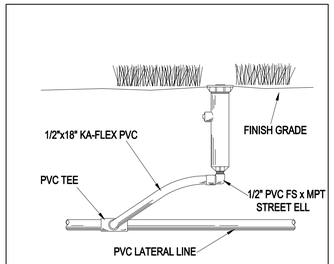


## 6" POP-UP SPRAY HEAD

(DO NOT USE SIDE INLET)

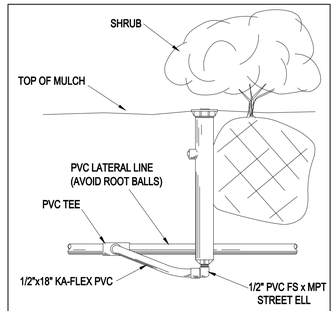


## 12" HI-POP SPRAY HEAD

(DO NOT USE SIDE INLET)

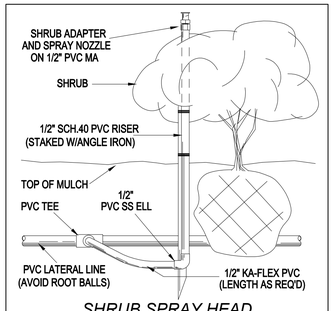


## SHRUB SPRAY HEAD

INSET HEADS INTO PLANTS FROM WALLS, WALKS, CURBS, ETC.
(PAINT RISER AND STAKE APPROVED COLOR - HEIGHT PER PLANTING)

| PATTERN | | GPM @ 30-psi | RADIUS @ 30-psi |
|---|---|---|---|
| 17-F | FULL | 4.60 | 17' |
| 17-TQ | THREE-QUARTER | 3.45 | 17' |
| 17-H | HALF | 2.37 | 17' |
| 17-T | THIRD | 1.53 | 17' |
| 17-Q | QUARTER | 1.15 | 17' |
| 15-F | FULL | 3.70 | 15' |
| 15-TQ | THREE-QUARTER | 2.92 | 15' |
| 15-TT | TWO-THIRD | 2.48 | 15' |
| 15-H | HALF | 1.85 | 15' |
| 15-T | THIRD | 1.30 | 15' |
| 15-Q | QUARTER | 0.92 | 15' |
| 15-CST | CENTER STRIP | 1.30 | 5' x 15' (2x) |
| 15-SST | SIDE STRIP | 1.30 | 5' x 15' (2x) |
| 15-EST | END STRIP | 0.65 | 5' x 15' |
| 15-LCS | LEFT CORNER STRIP | 0.65 | 5' x 15' |
| 15-RCS | RIGHT CORNER STRIP | 0.65 | 5' x 15' |
| 12-F | FULL | 2.70 | 12' |
| 12-TQ | THREE-QUARTER | 2.00 | 12' |
| 12-TT | TWO-THIRD | 1.74 | 12' |

| PATTERN | | GPM @ 30-psi | RADIUS @ 30-psi |
|---|---|---|---|
| 12-H | HALF | 1.30 | 12' |
| 12-T | THIRD | 0.89 | 12' |
| 12-Q | QUARTER | 0.67 | 12' |
| 10-F | FULL (LA) | 1.59 | 10' |
| 10-TQ | THREE-QUARTER (LA) | 1.50 | 10' |
| 10-TT | TWO-THIRD (LA) | 1.33 | 10' |
| 10-H | HALF (LA) | 0.88 | 10' |
| 10-T | THIRD (LA) | 0.57 | 10' |
| 10-Q | QUARTER (LA) | 0.42 | 10' |
| 8-F | FULL (FLT) | 0.97 | 8' |
| 8-H | HALF (FLT) | 0.47 | 8' |
| 8-T | THIRD (FLT) | 0.32 | 8' |
| 8-Q | QUARTER (FLT) | 0.24 | 8' |
| 5-F | FULL (FLT) | 0.65 | 5' |
| 5-H | HALF (FLT) | 0.65 | 5' |
| 5-Q | QUARTER (FLT) | 0.65 | 5' |

## HUNTER/RAIN BIRD SPRAY NOZZLE PERFORMANCE CHART

THE INSTALLER SHALL SELECT THE NOZZLE PATTERN WHICH BEST FITS THE LOCATION OF THE HEAD WITH RESPECT TO THE COVERED PLANTING.
ADJUSTMENT SHALL BE MADE AS NECESSARY TO MAXIMIZE COVERAGE, WHILE MINIMIZING OVERSPRAY ONTO PAVEMENT, BUILDINGS, TRIM OR FURNISHINGS.
SOME LOCATIONS MAY REQUIRE THE INCLUSION OF PRESSURE-COMPENSATING SCREENS TO ACHIEVE DESIRED COVERAGE.
NOT ALL PATTERNS ARE AVAILABLE FROM RAIN BIRD, NOR FROM HUNTER, SO BOTH PRODUCT LINES MAY BE MIXED WHEN NECESSARY.

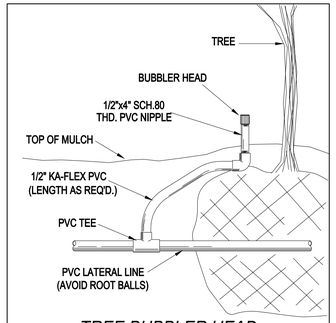


## TREE BUBBLER HEAD

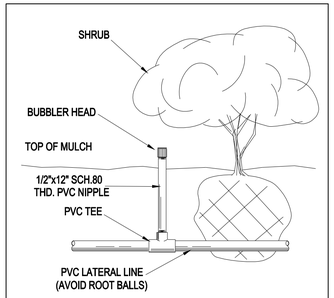


## SHRUB BUBBLER HEAD

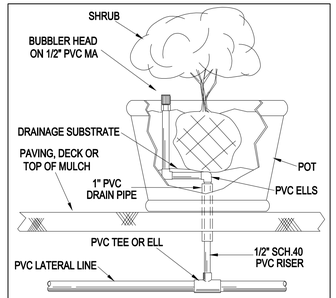


## SHRUB BUBBLER (IN POT)

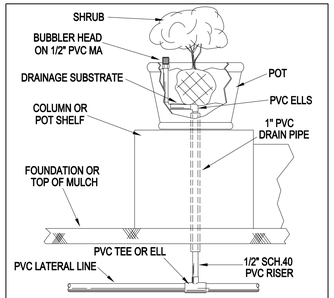


## SHRUB BUBBLER (IN WALL POT)

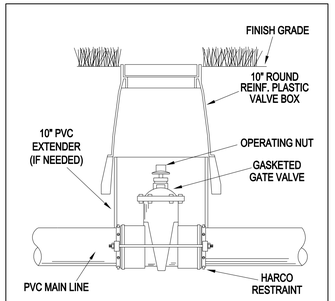


## ISOLATION GATE VALVE, GASKETED

(INSTALL JOINT RESTRAINTS FLUSH AGAINST VALVE BELLS)

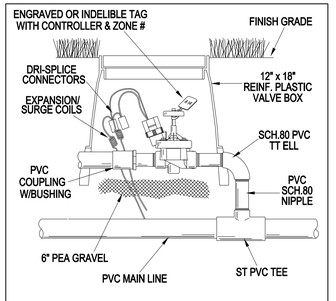


## ELECTRIC CONTROL VALVE

(USE APPROVED BOX EXTENSION IF REQUIRED BY DEPTH OF BURIAL)

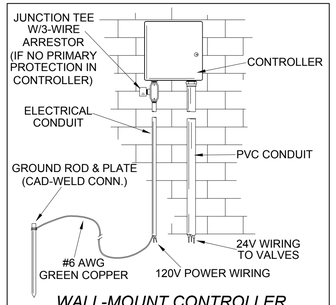


## WALL-MOUNT CONTROLLER

OBSERVE ALL MANUFACTURER'S REQUIREMENTS & RECOMMENDATIONS
(ALL WIRING SHALL CONFORM TO ELECTRICAL CODES)

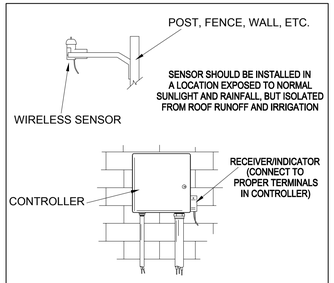


## RAIN SENSOR INSTALLATION

(REMOTE-WIRELESS)
OBSERVE ALL MANUFACTURER'S REQUIREMENTS & RECOMMENDATIONS

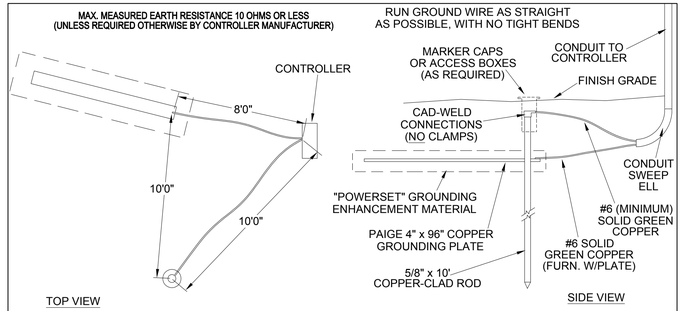


## GROUND ROD & PLATE INSTALLATION

( INTENSIVE ENVIRONMENT) OBSERVE ALL PREVAILING CODES AND REGULATIONS

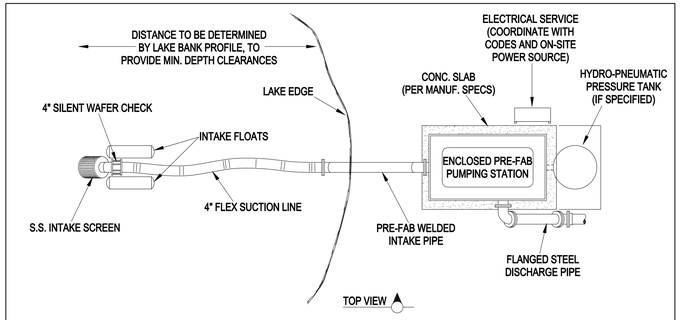


NOTES: PUMP STATION MANUFACTURER TO PROVIDE ALL EQUIPMENT EXCEPT DISCHARGE PIPING, CONCRETE, AND ELECTRICAL SERVICE.

ALL MATERIALS TO BE INSTALLED BY THE CONTRACTOR

PUMP STATION TO BE STARTED UP AND CALIBRATED BY FACTORY-DESIGNATED SERVICE PERSONNEL

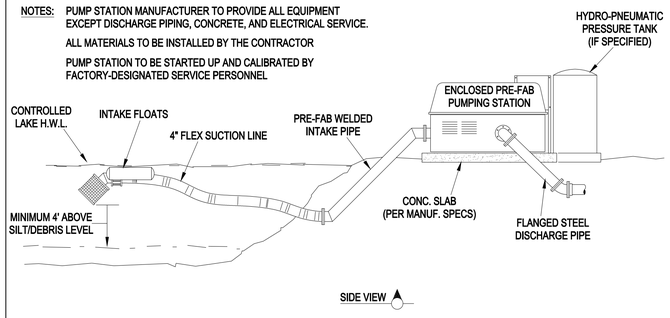


## TYPICAL PREFABRICATED LAKE PUMP PACKAGE

(INDIVIDUAL MANUFACTURERS WILL VARY - SUBMIT FACTORY SHOP DRAWINGS FOR APPROVAL)

NOTE: ALTERNATIVE MATERIALS, SUCH AS C-900 PVC, HDPE, OR DUCTILE IRON PIPE WILL ALSO BE CONSIDERED, IF PROPERLY SUBMITTED FOR APPROVAL.

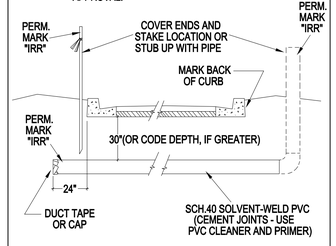


## SLEEVING DETAIL

(REQUIREMENTS VARY - CHECK CODES FIRST)

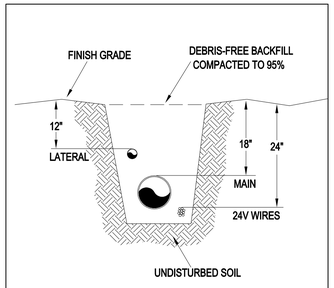


## TRENCHING DETAIL

(USE CODE DEPTHS, IF GREATER)

| | |
|---|---|
| Date: | 5/12/2016 |
| Drawn by: | CB |
| Reviewed by: | JW |
| Job Number: | 21606 |
| Revision: | Date: |

MAITLAND CONCOURSE NORTH
Maitland, Florida

Related Development, LLC.
Client Address

DIX.HITE + PARTNERS
150 W. JESSUP AVENUE
ORLANDO, FLORIDA
TEL 407.667.1777
FAX 407.667.1779

IRRIGATION PLANS

Irrigation Details

Sheet Number:
LA6.91

05/31/2016 4:52pm H:\work\Clients\Related Development, LLC\Maitland Concourse North\Common Areas\AutoCAD\Sheet Files\Irrigation\Maitline Plan.dwg LA6.91 jhalden

IRRIGATION SPECIFICATIONS

PART 1 - GENERAL

1.01 DESCRIPTION

A. Scope of Work:

The work consists of installing a complete automated underground irrigation system as shown on the Drawings and hereinafter specified. The work shall include the furnishing of all labor, equipment, materials, permits, meeting and coordination time, and supervision in performing all operations in connection with the construction of the irrigation system. The Bidders are advised that all work will be performed in a thorough, proper, and professional manner, and that the implementation of substandard or otherwise unapproved materials or methods will not be tolerated by the Owner.

B. General Description:

The irrigation system shall be constructed using the materials and methods shown on the Drawings and as called for in these Specifications. The system shall be constructed to grades and conform to areas and locations as shown on the Drawings. Locations of irrigation lines and equipment shown on the Drawings are largely diagrammatic. Mainline, valve, pump & well (if used) and/or supply P.O.C. locations shall be staked out by the Contractor and approved by the Owner prior to installation. Location of all other equipment shall be as close as practical to those shown on the Drawings. Mainline locations shall also be coordinated to avoid conflicts with pavement, easements, proposed and existing planting and/or other obstructions. The construction of the irrigation system shall include the furnishing, installation, and testing of all mainlines, lateral piping, fittings, sprinkler heads, swing joints, valves, controller equipment, wiring, pumping equipment (if used), all other pertinent materials and accessories, the removal and/or restoration of existing improvements, excavation and backfill, and all other work in accordance with the Drawings and Specifications, as required for a complete, functional, and fully warranted system Although architectural considerations may result in some differences of criteria between various areas of the project, the Contractor shall maintain uniformity of construction methods and materials throughout.

C. Relationship of the Documents:

The Drawings for this project and these Written Specifications are to be considered totally integral, with neither considered complete without the other. The Bidders shall thoroughly examine and familiarize themselves with all the information contained in the Documents, and by submitting a bid for this work, agree to accept and be bound by all the provisions made in the Documents. Should a discrepancy arise between the Drawings and these Specifications, the Drawings shall control, unless the item in question is part of an Addendum, dated later then the Drawings. The Owner or his chosen Representative shall be immediately notified of any such discrepancies, and shall take any corrective action deemed necessary.

D. Alternate Products and Methods:

Specific equipment, performances, installation methods, and other such criteria have been chosen for use in the design of this project, and these shall be considered the basis for the Base Bid. The use of alternate equipment and/or methods shall not be acceptable without prior approval. Consideration shall be given only for those materials and methods whose performance most closely matches that which is contained in the original Documents, and most reasonably serves the intent of this design. Any modifications or other impact to this design which may be necessitated by the submission of alternate equipment and/or methods shall be clearly noted within the submittal, and subsequently acted upon by the Owner. The Bidders shall warrant that any bid submitted for any equipment shall include all materials and work necessary for the proper and fully warranted installation of the equipment, including, but not limited to, increased pipe or wire size, fittings, concrete, gravel, or any other associated materials and/or labor. After the Contract is awarded, any alternative material or methods that the Installer wishes considered shall be submitted in a written "Request for Substitution", which shall include full data for the proposed alternate, a cost difference (plus or minus) and a detailed reason for submitting the alternate.

E. Related Work Specified Elsewhere:

Consult the Owner for documents pertaining to other trades relative to this work.

1.02 SUBMITTALS

A. Requirements:

Prior to commencement of work under this Contract, the Contractor shall submit six sets of submittal data on all proposed materials and equipment. This data shall include copies of all manufacturers' warranty information, including documentation of any extended warranties, if applicable to this project. Submittals shall be in three-ring binders with various sections tabbed and properly indexed. Each item shall be marked as acceptable to the General Contractor before the Engineer, Landscape Architect, or the Consultant shall consider it for approval.

PART 2 - PRODUCTS

2.01 MATERIALS

A. General:

The Contractor shall supply all material and equipment of the types and makes shown on the Drawings. No substitutions shall be permitted without prior written approval of the Owner. The Contractor shall inspect all material and equipment prior to installation; any defective materials or equipment shall be removed immediately from the site and replaced with the proper items. All materials shall be new and current production. Pipe shall be delivered to the site in full 20-foot lengths, and shall be clearly and permanently marked with manufacturer's name, classification, and code references. Any items used in the installation which are subsequently found to be defective, improperly installed, or not as specified herein and on the Drawings, shall likewise be removed and replaced with the proper materials and equipment, and installed in the proper manner, as interpreted by the Owner. Any work done or materials used for this purpose shall be provided by the Contractor at no cost to the Owner. All materials normally associated with the proper installation of the specified equipment, or required by the corresponding manufacturer of the equipment, shall be considered part of the work, regardless of whether every item is specifically called out in the Documents. In the event that less costly type of equipment is accepted for use on the project, or any equipment is deleted or omitted from the work, the Contractor shall discount the Contract amount (or if paid, shall fully refund the difference to the Owner) regardless of whether the action was initiated by the Owner or the Contractor. The use of prototype or field-test materials is absolutely prohibited on this project, unless the permission of the Owner or his authorized representative is obtained in advance.

PART 3 - INSTALLATION

3.01 GENERAL:

A. Description:

The Contractor shall install a fully operational and warranted automatic irrigation system. Any and all materials and prevalent methods necessary to do so shall be provided by the Contractor as part of this contract, even if not specifically called for in the Drawings and/or these Specifications. The Contractor shall obtain all the necessary permits and inspections for this work, and shall be responsible for penalties or damages which may result from his failure to do so. The content and enforcement of codes and regulations may vary from job to job, or change over time between Design and Construction. Information contained in these documents is for reference purposes ONLY, and shall not be considered an absolute interpretation of prevailing requirements. The responsibility for researching code requirements, and for conformance thereto, shall remain solely that of the Contractor. The Contractor shall NOT install any materials or perform any work that is known to be in violation of any standing code requirement or regulation, even if so directed by the Design Documents. Conflicts of this nature should be brought immediately to the attention of the Project Manager using a written "Request for Information".

B. Existing Conditions:

The Drawings show conditions as they are believed to exist, but it is not intended, nor should it be interpreted, that the conditions shown constitute a representation by the Owner that the conditions actually exist. The Contractor shall personally inspect the job site prior to bidding, to fully familiarize himself with the nature of the work, and shall accept full responsibility for any loss sustained as a result of differences between the conditions shown on the Drawings and any actual condition revealed during the completion of the work. (EXCEPTION: Rock Clause; See section 3.02.D.) The Contractor shall, prior to excavation, verify the location of any and all existing underground improvements, and shall take any action necessary to protect said improvements during his work, and eliminate service outages. This may include, but not be limited to, existing irrigation. If the site contains areas of protected wetland or other environmentally sensitive areas, the Contractor shall fully acquaint himself with the actual limits of these areas and any corresponding buffer zones, and shall make sure that the progress and/or result of his work shall not impact these areas. These areas may not be excavated, drained, thrown into by sprinklers, used for equipment access or storage, or otherwise disturbed in any way whatsoever. Any fees or penalties assessed upon the Owner as a result of violations by the Contractor will be paid by the Contractor. The Contractor shall be responsible for checking the irrigation water source for salinity, odor, stain or other objectionable properties, and reporting the results to the Owner and Landscape Architect. If the irrigation source is from pressurized service, the Contractor shall test the supply pressure before work begins, to ensure that it is adequate for the proper operation of the system. This work should be performed as early as possible.

C. Trenching and Backfilling:

The Contractor shall be responsible for staking out the head locations on the project. When grading has been established in a particular area, the Contractor shall, prior to beginning any excavation in the area, cause staking to be performed, and shall secure the approval of the Owner or Landscape Architect of the finished staking. Excavation shall be open vertical construction sufficiently wide to allow free working space around the work installed, and allow ample space for backfilling and tamping. Trenches for piping shall be cut to required grade lines, and compacted to provide accurate grade and uniform bearing for the full length of the piping. Bottoms of trenches shall be free of rocks and other sharp objects. Unless specifically stated to the contrary, minimum depth of cover shall be 18" on mainline piping, and 12" on lateral piping. Minimum depth of cover on low-voltage wiring shall be as provided by the electrical codes in effect. Intersecting pipes and those sharing a common ditch shall have a minimum of three inches clearance from each other, and from other utilities. Initial backfill shall be pulverized native soil, free of foreign matter. Within four inches of the pipe shall be clean soil or sand. Remaining backfill shall be compacted to dry density equal to that of adjacent undisturbed soil, and shall conform to adjacent grades without depressions, lumps, or other irregularities. In lieu of trenching, piping may be laid by plowing, using approved equipment and methods. The Contractor shall still abide by the minimum clearances prescribed above.

D. Rock Clause:

If the ground should be such that the Contractor encounters large rocks, debris, or other obstructions that cannot be trenched through or otherwise removed during the normal course of construction, the Owner shall be notified, and a cost for excavation and backfill with selected materials shall be negotiated.

E. Pipes:

Pipe and associated fittings shall be as noted in the Drawings. Pipe shall be installed in such a manner so as to provide for expansion and contraction in accordance with the manufacturers published recommendations. Spigot ends of the pipe shall be firmly and completely seated in the fittings. Angular deflections in the joint shall not exceed manufacturer's recommendations. Lines shall be flushed before installation of heads. Heating and bending the pipe is not permitted. Pipe shall be cut in such a manner so as to provide a clean, square cut, free of chips, burrs, or splitting. Pipe shall be laid using a cleaner, primer, and cement (if solvent-weld) or lubricant (if gasketed joints) approved by the manufacturer of the pipe. As pipe is laid, installed pieces shall be restrained, so that slippage does not occur in previous joints. The Contractor shall monitor previous joints for slippage, until joints are set. Cemented joints shall be twisted one quarter turn as they are assembled, and excess solvent shall be immediately wiped away.

F. Inspections:

The Owner or his designated Representative may appear on site at any time to make periodic informal inspections. Other persons, such as the Consultant, or a representative of an equipment manufacturer may be included to offer comments. If it is determined that the provisions of the Documents or other requirements of the Work, including the proper and warranted installation of any equipment, have not been complied with, the Installer shall be directed to make immediate and satisfactory reparations. Upon completion of the Work, the Owner reserves the right to schedule a formal walk-through inspection, at which a punchlist will be prepared, outlining items of concern or deficiency that must be corrected prior to the Work being considered complete.

G. Record Drawings:

The Installer shall be responsible for maintaining up-to-date on-site record drawings during the progress of the work. Record drawings shall show all major deviations from the Construction Drawings, and shall document installed mainline and wire routings, valve locations and designations, controllers, pavement crossings, splice boxes, pumping equipment (if used) and any other major equipment. These on-site drawings shall be available for inspection at any time during execution of the work, and shall be compiled into a complete, legible and reproducible (or CAD) "As-Built" drawing once work is complete. This completed drawing shall be provided to the Owner prior to Final Acceptance.

H. Warranty:

The entire system, including parts and labor, shall be warrantied by the Installer for a period of not less than one year from date of acceptance by the Owner. Manufacturers' warranties of greater than one year shall be fully honored for their duration. The Owner reserves the right to seek damages for improper or substandard work up to and beyond the expiration of the warranty, to the extent allowed by law. Further, during the warranty period, the Owner reserves the right to act independantly to protect his property in the event of any failure, without respect to warranties in force, if the failure cannot be, or is not, resolved in a timely manner by the Installer. The Owner may then elect to seek compensation from the Installer if the failure is determined to be a result of defective materials or workmanship.

| | |
|---|---|
| Date: | 5/12/2016 |
| Drawn by: | CB |
| Reviewed by: | JW |
| Job Number: | 21606 |
| Revision: | Date: |

MAITLAND CONCOURSE NORTH
Maitland, Florida

Related Development, LLC.
Client Address

DIX.HITE + PARTNERS
150 W. JESSUP AVENUE
LONGWOOD, FLORIDA 32750
TEL 407.667.1777
FAX 407.667.1779

IRRIGATION PLANS

Irrigation Specifications

Sheet Number:
LA6.99